Non-Addressable Indoor Chime & Multi-Strobe LED Notification Device (VDOT-CS)

Description

The Velocity non-addressable indoor range of NAC devices are available in a variety of solutions to fit many requirements.

The VDOT-C chime sounder has a UL decibel rating between 70dB - 71dB @ 10 ft or the conversion equivelent to 79dB - 80dB @ 1m, The device has adjustable sound output settings allowing the Hz level to be adjusted manually directly from the product.

The chime sounder is combined with a intergrated high intensity white LED strobe with various candela LED output levels, with a choice of either 15cd, 30cd, 75cd 110cd output levels.

The LED strobe considerably lowers the power consumption when the device is in alarm state, allowing more devices to be controlled and powered on the Velocity notification appliance loop / circuits.

The devices are flush wall mounted as standard be flush or surface wall mounted with the addition of a surface mounting back box.

They are also available in 2 colour options, red or white.
Powered by 2-wire DC24V, these appliances are designed to be connected to, and activated by a UL listed Velocity control panel. When multiple appliances are connected to the Velocity NAC, the sound and light between products on the same circuit area can be synchronised.

When an alarm signal is emitted, it means there may be an emergency, and should be payed attention immediately.

Features

- Designed to meet UL requirements
- Compatible with all Velocity-UL NAC Circuits
- Adjustable sound light output levels
- Indoor use only
- Powered by 2-wire DC 24V.
- Can be installed in a standard square 4 inch square gang box
- Appliances on the same NAC circuit can be synchronised.

Product Mounting - Wall Mount

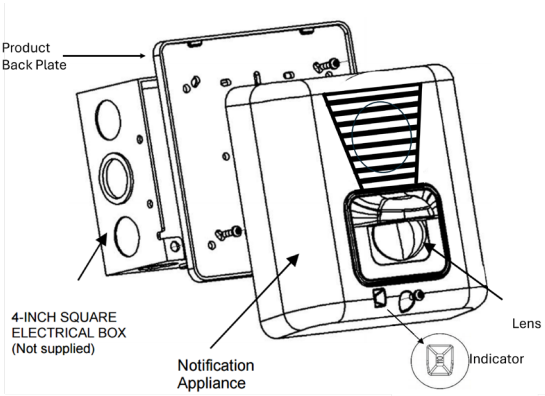

Figure 7.

Product Specification

Approval / Standard	UL 464 / UL Laboratories
Mounting / IP Rating	Wall Mount / IP23
Nominal Voltage	Regulated 24 VDC
Operating Voltage Range	Regulated 16 VDC to 33 VDC
Strobe Flash Rate	1x flash per second
Operating Temperature	32 ° to 120 ° F (0 ° to 49 ° C)
Humidity Range	10% to 93%, non condensing at 100 ° F (38 ° C)
Dimensions H x W x D	140mm x 140mm x 66mm 140mm x 140mm x 106mm with VDOT-BB
Connections	Terminal for 18 AWG to 12 AWG (0.82 mm2 to 3.31 mm2)
Mounting Box	4 x 4 inch Double gang box or Surface Back Box (VDOT-BB)

Output Levels

Chime Output Levels

Max Volume Sound Level	Max Operating Current RMS@16VDC	Sound Pressure Level Measurement dBA
750Hz	24mA	70dB @ 10 ft
1250Hz	24mA	71dB @ 10 ft

Minimum sound pressure is measured in a UL reverberant test chamber @16vdc

Strobe Output Levels

Candela Rating	Input Voltage Regulated DC	Maximum Operating Current RMS*
15	16 VDC	45 mA
30	16 VDC	69 mA
75	16 VDC	93 mA
110	16 VDC	122 mA

Part Numbers

VDOT-CS/R Flush Mount Chime & Multi LED Strobe, Red
VDOT-CS/W Flush Mount Chime & Multi LED Strobe, White

Additions
VDOT-BB/R Surface Mount Back Box, Red
VDOT-BB/W Surface Mount Back Box, White

Stobe Light Output

There are four grades in the S/V appliance strobe strength:

15cd (factory preset), 30cd, 75cd, 110cd, adjust the slide switch to the required brightness in the back of the product (See Figure 8)

There is a small window under the lens to observe the strength grade (See Figure 7). The strobe dispersion ratings of the product follow the standard UL 1638, the relationship between the angle and the strength is as following tables:

Wall Mount Strobe Vertical and Horizontal Light Dispersion Ratings (Room Temperature)			
Vertical Dispersion (wall to floor)		Horizontal Dispersion	
X-Plane Degrees*	Percent of rating	Y-Plane Degrees*	Percent of rating
0	100	0	100
5 - 30	90	±5 - 25	90
35	65	±30 - 45	75
40	46	±50	55
45	34	±55	45
50	27	±60	40
55	22	±65 - 70	35
60	18	±75 - 80	30
65	16	±85 - 90	25
70	15	Compound ±45 right	24
75	13	Compound ±45 left	24
80 – 90	12		
*Tolerance of ±1 degree is permitted.			

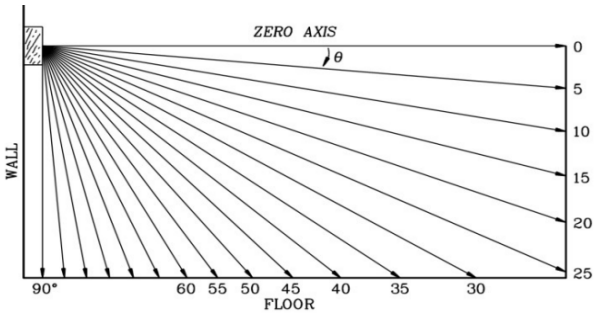

LED Dispersion Wall to Floor

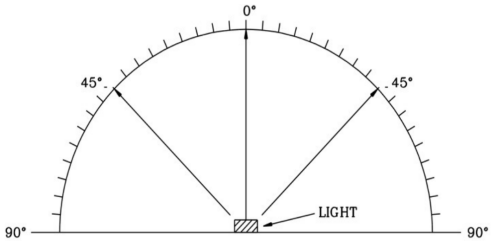

LED Horizontal Dispersion

Strobe - Candela Selecting

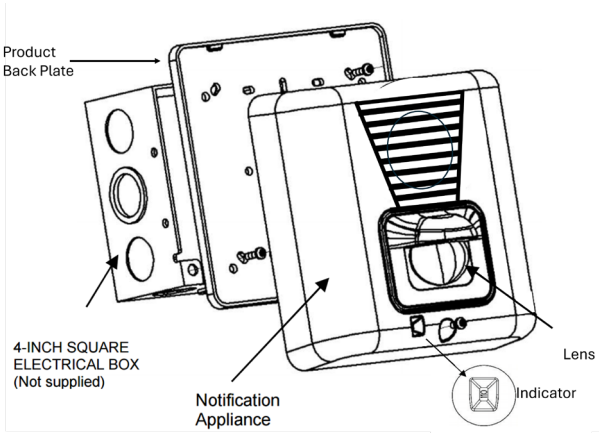

Figure 7.

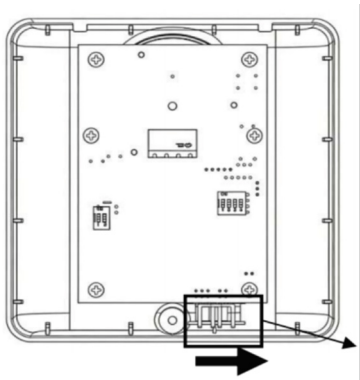

Insert a screwdriver into the candela selector, slide left or right to select the strength grade.

Figure 8.

Wiring
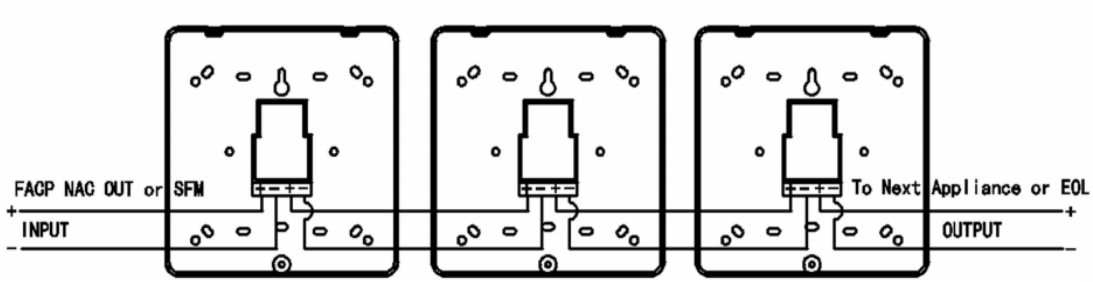
Ensure that the total current consumption of the circuit does not exceed the maximum load current of the NAC modules or SCM module, the device quantity must be considered in the design of the loop system.